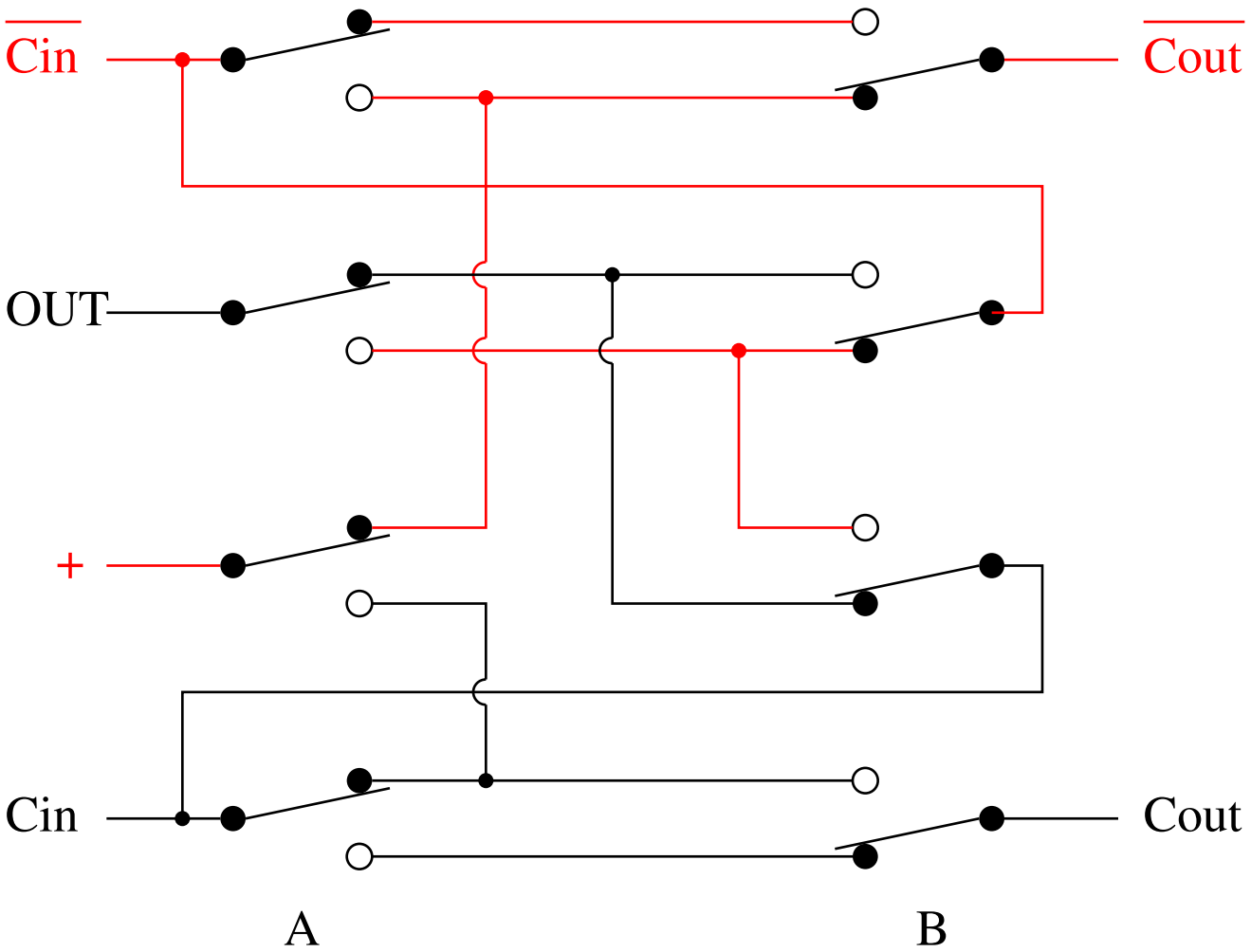
$\overline{\text{Cin}}$
$\overline{\text{Cout}}$
OUT
+
Cin
Cout
A
B